ES4300A-K1-T1

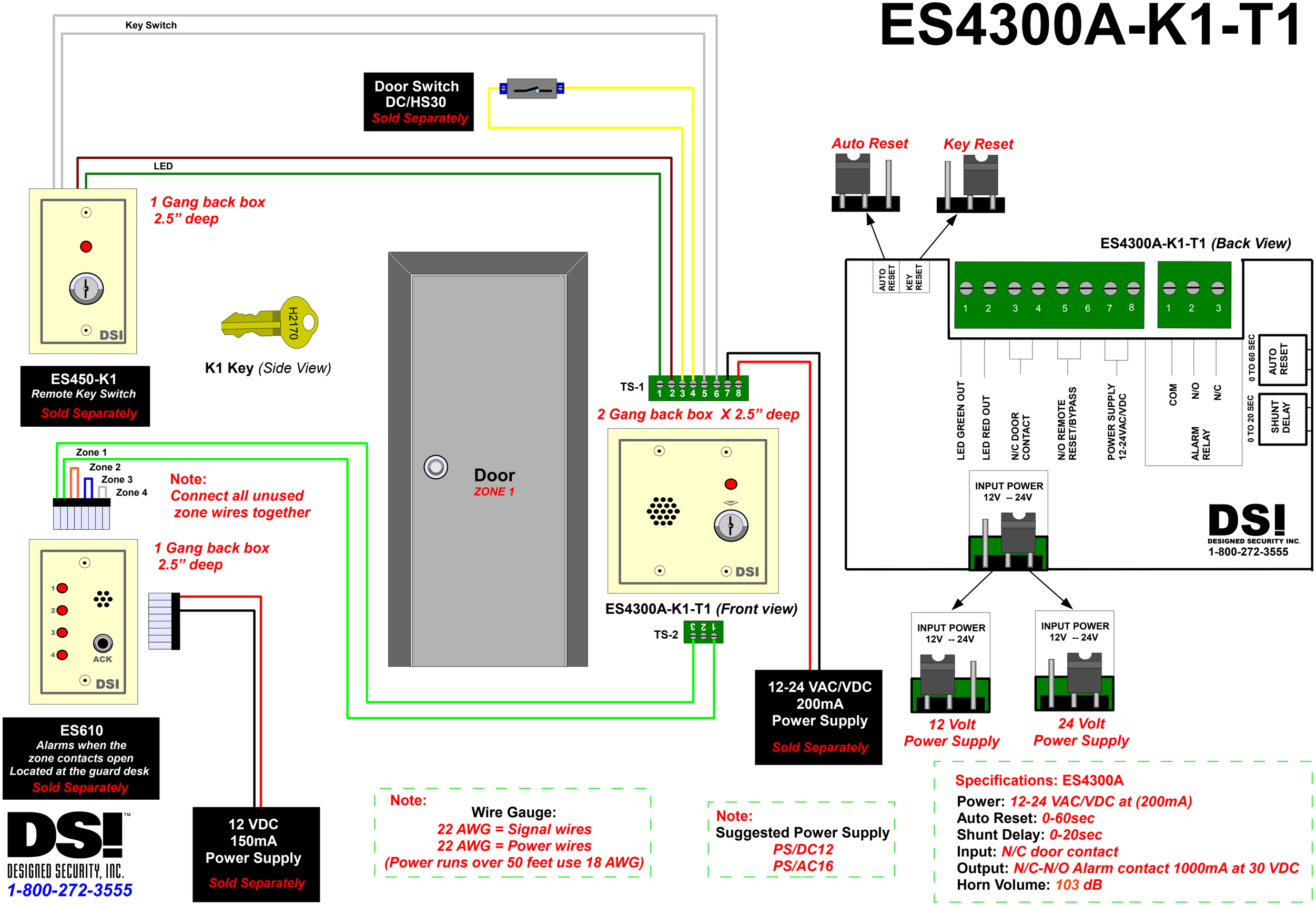

Note:
Wire Gauge:
22 AWG = Signal wires
22 AWG = Power wires
(Power runs over 50 feet use 18 AWG)

Note:
Suggested Power Supply
PS/DC12
PS/AC16

Specifications: ES4300A

- **Power:** *12-24 VAC/VDC at (200mA)*
- **Auto Reset:** *0-60sec*
- **Shunt Delay:** *0-20sec*
- **Input:** *N/C door contact*
- **Output:** *N/C-N/O Alarm contact 1000mA at 30 VDC*
- **Horn Volume:** *103 dB*